EXTRACTAVENT - REV 201

AVAILABLE FOR ALL ROOF TYPES

The Rev 201 is an innovative ventilation system, designed to eliminate hot, stale air from the roof cavity. This helps alleviate the temperature of the rest of the building.
The product is an energy efficient means to ventilation, requiring no electrical connections and ongoing power bills. It is a completely natural way of making your living environment more comfortable.

A press-formed one piece base allows the product to mate perfectly with the roof type / profile, reducing reliance on sealants for waterproofing and allowing for efficient and effective installation.

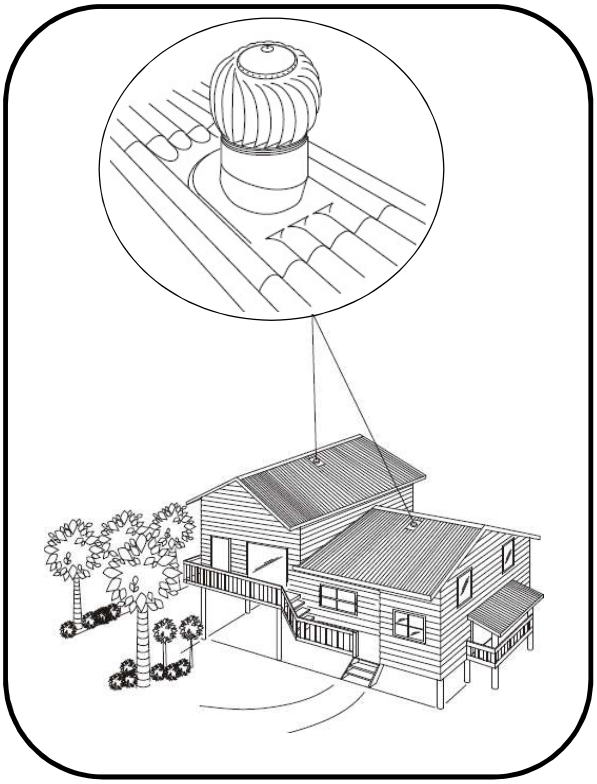

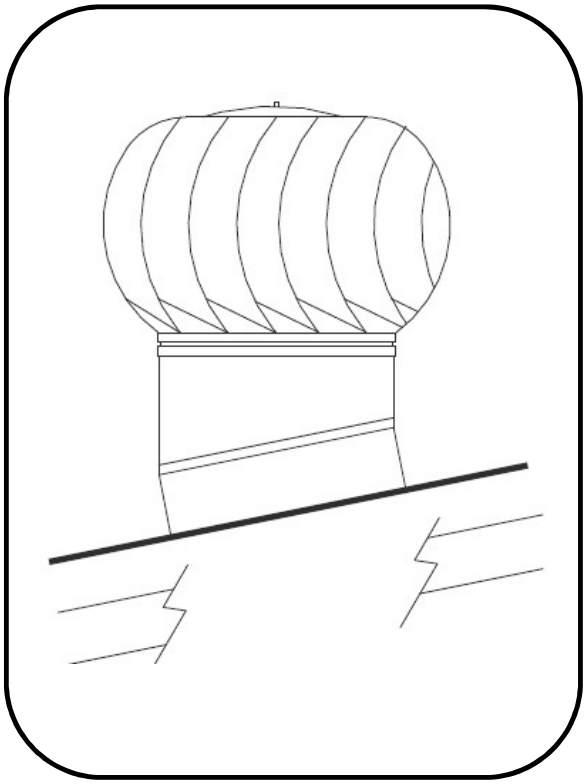

REGENT SKYLIGHTS

The skylight system illustrations contained in this brochure are the sole property of Regent Skylights and are reserved under copyright law. It is the responsibility of the user to ensure that the selected skylight system complies with the relevant building codes and authorities requirements. Regent Skylights reserves the right to improve or modify the skylight systems at any time. Zincalume® and Colorbond® are registered trademarks of BlueScope Steel Limited. All Wiring and connections to power must be carried out by a licensed electrical contractor to SAA wiring rules.

ARCHITECTURAL SPECIFICATION:

Roof cavity ventilation systems shall be REGENT REV201, complete with a one piece pressed metal base and rotary ventilator.
Installation shall be in accordance with the manufacturer's printed instructions.

COMPONENT LIST:		
PART No.	QTY	DESCRIPTION
1E/300	1	preflashed base air only (300mm)
3F	1	300 Rotary Ventilator

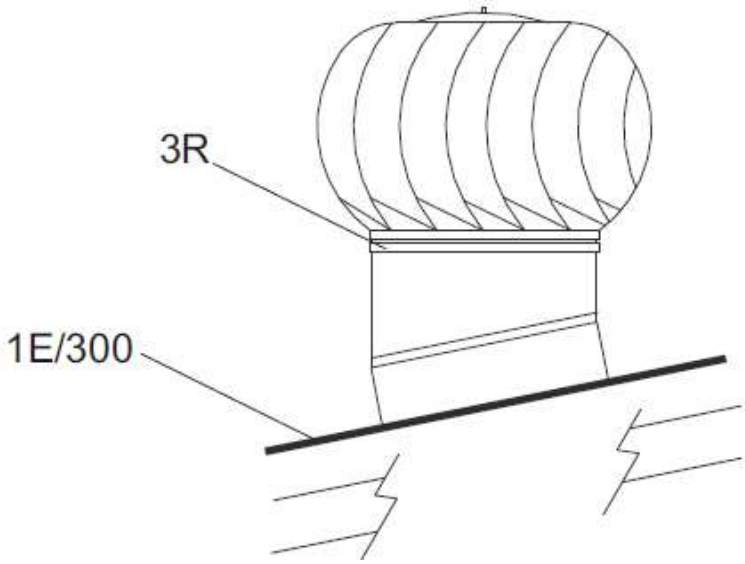

ORDERING INFORMATION

Contact your local distributor for further details

1. SELECT REV MODEL ☑ REV201

2. SELECT ROOF TYPE

CORRUGATED IRON
ORDER CODE: CLX ☐

Suits Corrugated roofs (profile offered is manufactured to match Custom Orb® and similar)

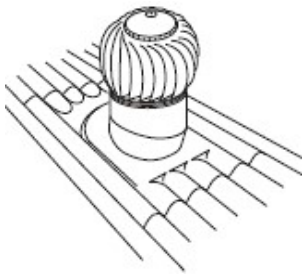

UNIVERSAL METAL DECK
ORDER CODE: UMD ☐

Suits most forms of metal deck roofing with rib heights of up to 50mm

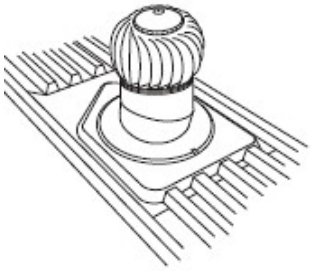

TILED
ORDER CODE: ZTS ☐

A lead free Zincalume® base that suits all types of concrete, metal and clay tiles*.

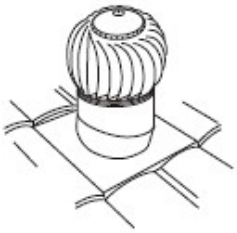

*Adapters can be supplied on request for Wunderlich Swiss and similar high profile tiles

3. SELECT ACCESSORIES (IF REQUIRED)

Standard kit include Zincalume® flashing

☐ PAINTED FINISH

_____
NOMINATE COLOUR

REGENT SKYLIGHTS
A.B.N 52 001 918 494
836 Boundary Road
Coopers Plains, QLD 4108

REGENT SKYLIGHTS
A.B.N 52 001 918 494
Unit 4 / 30 Artisan Road
Seven Hills, NSW 2147

LOCAL DISTRIBUTOR: